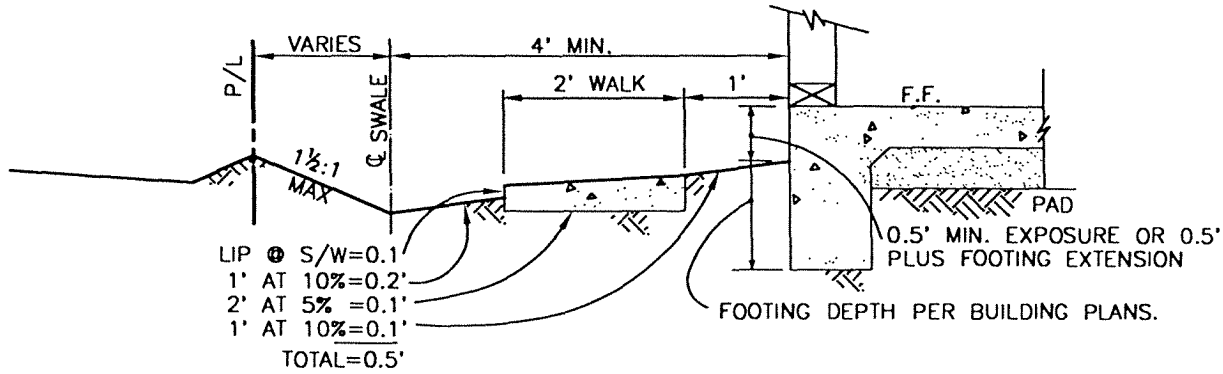

TYPICAL SWALE SECTION

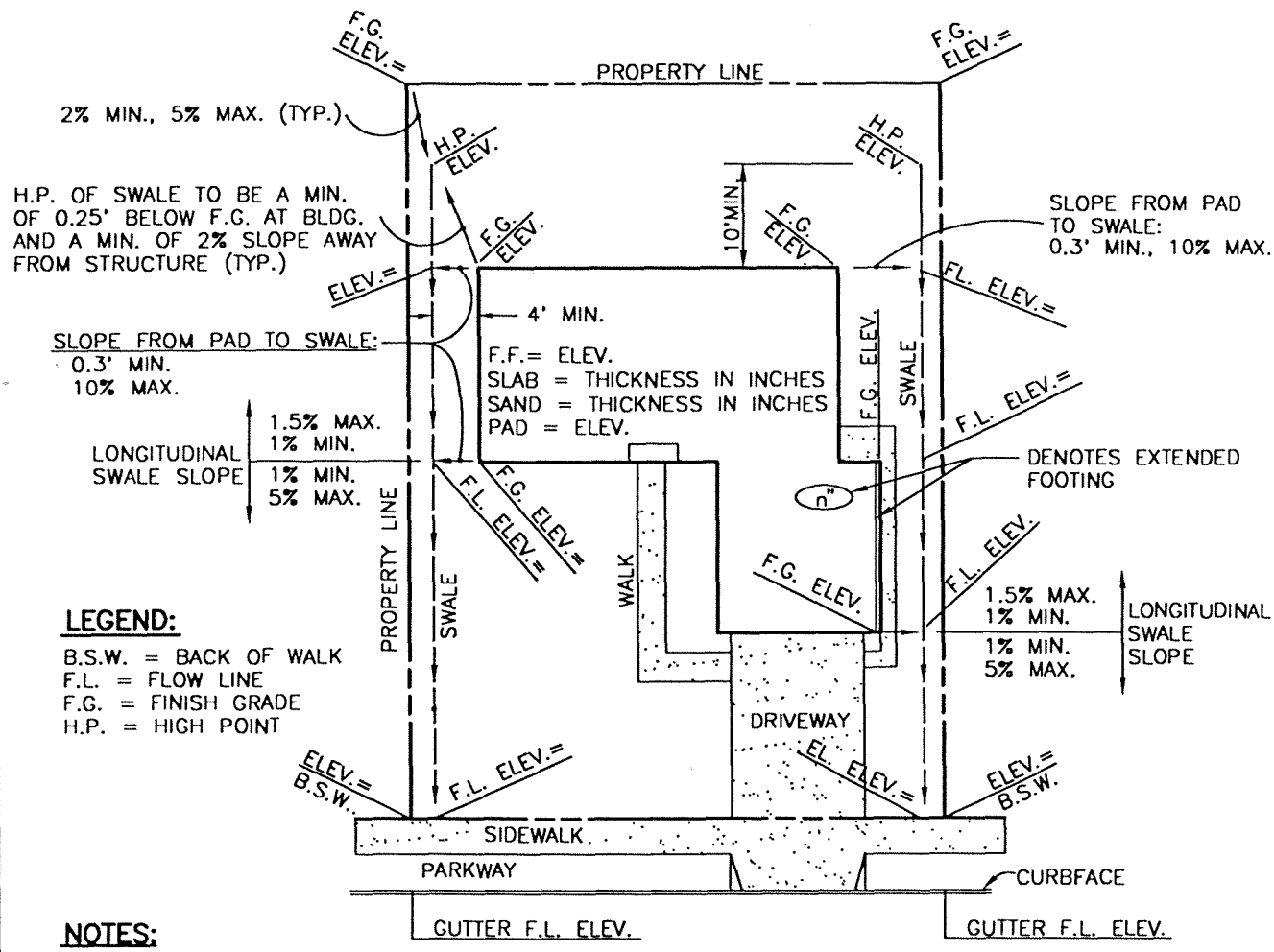

LEGEND:

B.S.W. = BACK OF WALK
F.L. = FLOW LINE
F.G. = FINISH GRADE
H.P. = HIGH POINT

NOTES:

1. THE (n") DENOTES AN EXTENDED FOOTING WHERE "n" EQUALS THE EXTENDED FOOTING DEPTH.
2. DEVIATION FROM THIS CRITERIA WILL REQUIRE PRIOR APPROVAL OF THE CITY OF OXNARD.
3. CALL OUT ALL ELEVATIONS AS SHOWN.
4. THIS PLATE PRIMARILY APPLIES TO SINGLE FAMILY RESIDENTIAL DEVELOPMENT. FINISH FLOOR ELEV. SHALL BE 25" ABOVE THE LOWEST ADJACENT STREET GUTTER OR BE PROTECTED FROM A 100 YEAR STORM STORM, WHICHEVER IS GREATER.
5. SIDEWALK DRAINS SHALL NOT BE USED IN RESIDENTIAL CONSTRUCTION.

REV.	APPR. BY	DATE

REV.	APPR. BY	DATE

CITY OF Oxnard
Department of Public Works

STANDARD LOT DRAINAGE

DRAWN: STAFF | CKD.: STAFF

APPR. Granville M. Bowman

STANDARD PLAN 2002

PLATE 601

SHEET 1 OF 1